RoHS

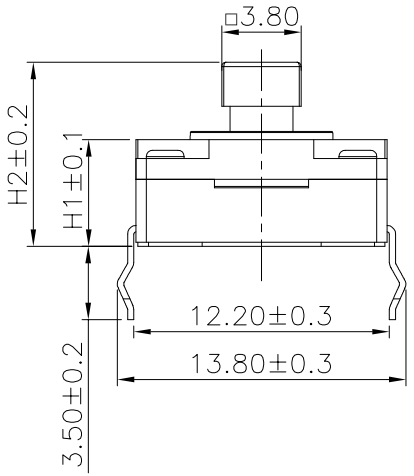

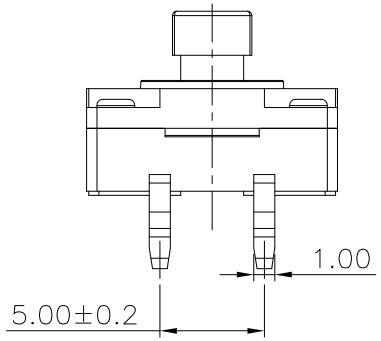

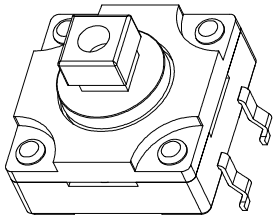

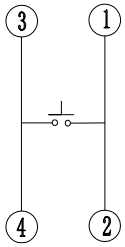

Circuit Diagram

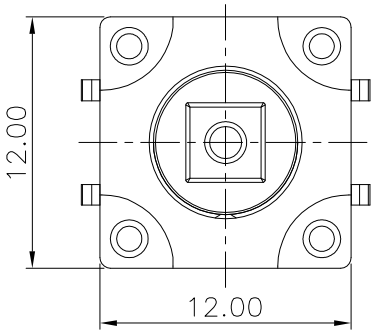

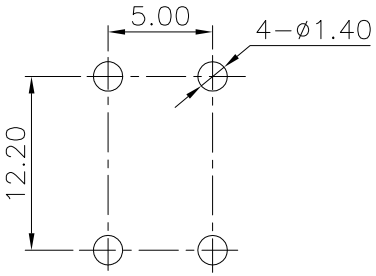

PCB Layout(Pattern side)

Height(高度) :NO.1

5.1	B	8.8	B
3.8	A	7.3	A
H1	X=	H2	X=

Material: 防水等级IP67

Button 按钮	**PBT/LCP**
Cover plate 盖板	**PBT/LCP**
Shrapnel 弹片	不锈钢（复银）
Base 基座	**PBT/LCP**
Pin 引脚	磷铜 （镀银）

Main technical specifications:

Rated load(额定负荷):	**DC 12V 30mA**			
Contact impedance(接触阻抗):	**≤100mΩMAX**			
Insulation impedance(绝缘阻抗):	**≥100MΩMIN**			
Welding resistance temperature（耐焊温度）:	**250±5°5s**			
OPERATING LIFE（电气寿命):	**50,000 cycles**			
Usage temperature（使用温度）:	**-25 °C to 85 °C**			
Operating humidity（使用湿度）:	**≤85% RH**			
Trip(行程):	**0.35±0.1mm**			
Operating force(操作力): NO.**2**	1	**90±30gf**	2	**130±30gf**
	3	**180±50gf**	4	**250±50gf**
	5	**350±50gf**	6	

public errand（公差）：±0.2mm unit（单位）：mm

LCZY ELECTRONICS(SHEN ZHEN)CO.,LTD

COPYRIGHT RESERVED,PLEASE DO NOT COPY.

PART NAME	SWITCH			DRAWING	G.L CHEN	DWG.No.	**LCZY**
PART NO.	K2-1841DT			CHECK	Z.LIU	REV.	A1
UNIT : mm	TOLERANCE OTHERWISE	UP TO 5 ±0.2 ABOVE 5 ~30 ±0.3 ABOVE 30 ±0.5 ANGLE ±3°	ANGLE 0°±3°	APPROVAL		DATE	K2-09-2019
				SCALE	2:1	PAGE	1 OF 1

K2-1841DT-□-□